MACHINING LIMITS TO BE +/- .010" UNLESS OTHERWISE STATED	ISSUE NO	1	2							THIRD ANGLE PROJECTION
	DATE	1/8/99	22/11/99							

ISSUE NOTES
ISSUE 1 ORIGINAL
ISSUE 2 COVER ADDED

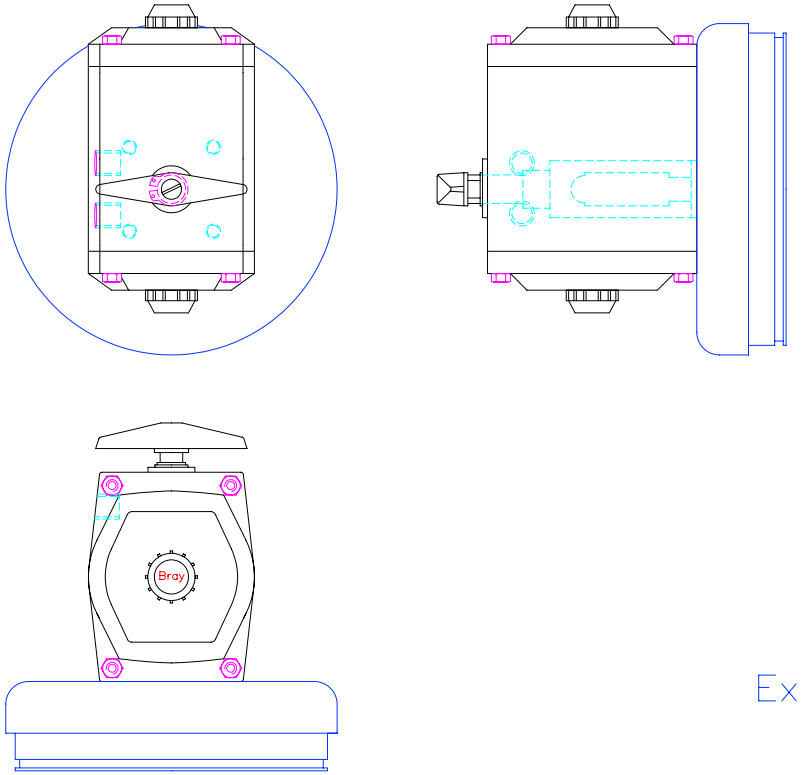

Exhibit 2

CROSS MANUFACTURING CO (1938) LTD MIDFORD ROAD BATH BA2 5RR ENGLAND	TITLE	INDEXING ACTUATOR & CAP ASSEMBLY BRAY ACTUATOR SERIES 90 SIZE 061	MATL	DRAWN WFSH	No. ZG 10013
			SPEC AS DWG	CHECKED WFSH	
			NO. OFF	DATE 1/8/99	

MACHINING LIMITS TO BE +/- .010" UNLESS OTHERWISE STATED	ISSUE NO	1	2							THIRD ANGLE PROJECTION
	DATE	9 OCT 02	12 DEC 02							

ISSUE CONTROL NOTES

ISSUE 1 ORIGINAL
ISSUE 2 VERSION FOR OBA3

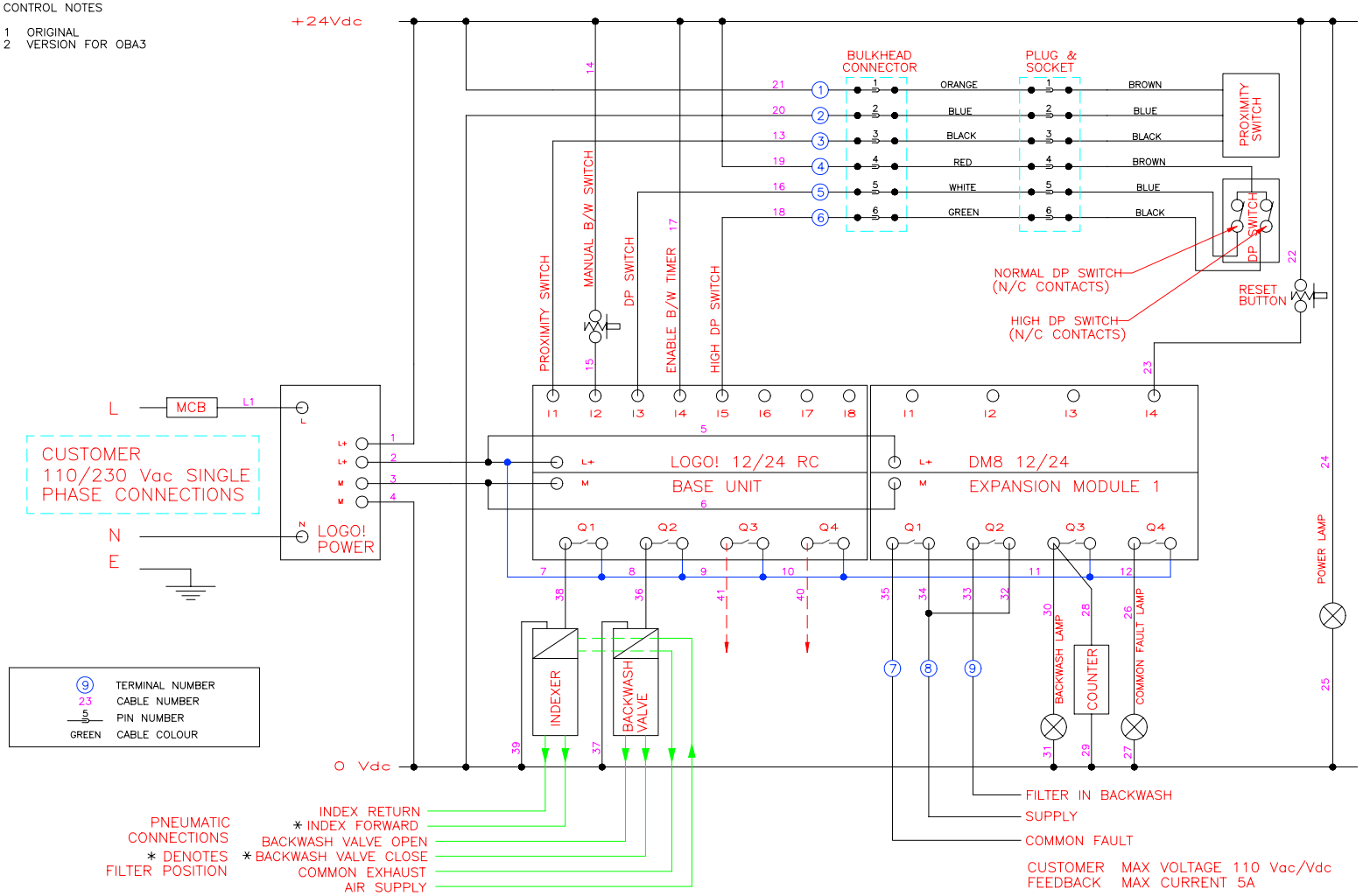

CROSS MANUFACTURING CO (1938) LTD MIDFORD ROAD BATH BA2 5RR ENGLAND	TITLE PHOENIX PNEUMATIC CONTROLS GENERIC WIRING DIAGRAM V11.3 (PROX. SENSOR)	MATL	DRAWN WFSH	No. ZG 10146
		SPEC	CHECKED WFSH	
		NO. OFF	DATE 9 OCT 02	